OTTO VON GUERICKE UNIVERSITÄT MAGDEBURG
INF FAKULTÄT FÜR INFORMATIK
Communication and Networked Systems

CHAIR OF COMMUNICATION AND NETWORKED SYSTEMS (COMSYS)

(Master Thesis in Internet of Things Domain)

Topic: **Experimental Evaluation of the Internet of Things MAC Protocol**

Duration: 180 hours
Contact: Saleem Raza (G.29, R.308) or
Email: saleem.raza@ovgu.de

Introduction

Time Synchronized Channel Hopping (TSCH) Medium Access Control (MAC) Protocol is considered the most suitable MAC protocol for the Internet of things (IoT) protocol stack as shown in Fig.1 [2] [3]. TSCH protocol is among the 6 different MAC modes of IEEE 802.15.4e standard [1]. The protocol has received considerable attention due to its appealing features such as high reliability, low latency, and low energy consumption. In a TSCH network, nodes communicate through slotframe structure, where each node is assigned a cell, a cell is an opportunity for a node to gain access to the shared wireless medium to communicate with other nodes. It consists of unique *slotOffset* and a *channelOffset* as shown in Fig.2 [3]. The protocol uses frequency diversity to circumvent the effects of interference and fading. Moreover, using many frequencies increases the network capacity allowing more nodes to transmit simultaneously.

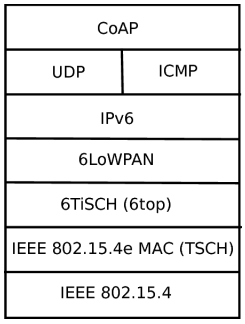

Fig. 1. IoT protocol stack

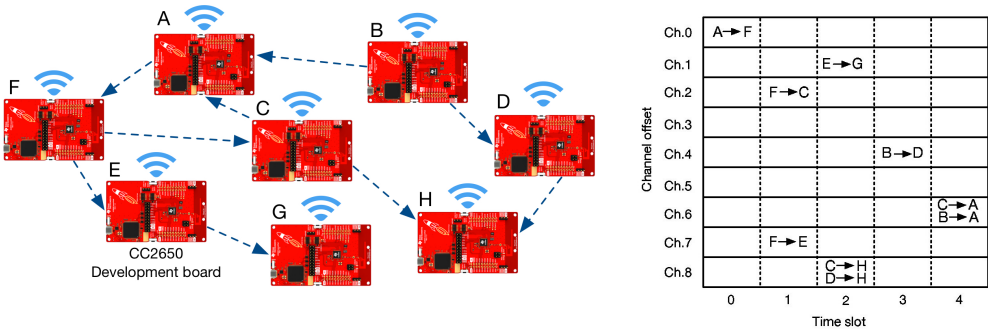

Fig.2. TSCH MAC operation, showing communication schedule

In this thesis, we plan to evaluate TSCH MAC protocol experimentally on sensor hardware and test its different performance metrics such as reliability, scalability, latency, and energy efficiency.

Objectives

- Evaluate the TSCH MAC on the CC2650 development board
- Evaluate latency, reliability, energy, and throughput aspects of the MAC
- Comparing the results with IEEE 802.15.4 MAC

Pre-requisites

- Have a fair understanding of the MAC sublayer, part of data link layer, in OSI protocol stack.
- Be familiar with C programming language

References

[1] *LAN MAN, Standards Committee, and Ieee Computer. IEEE Std 802.11ae-2012, IEEE Standard for Information Technology Telecommunications and information ex- change between systems Local and metropolitan area networks Specific requirements Part 11: Wireless Medium Access Control (MAC) and physical layer (PHY). Vol. 2012. April. 2012.*

[2] *Al-Fuqaha, Ala, et al. "Internet of things: A survey on enabling technologies, protocols, and applications." IEEE Communications Surveys & Tutorials 17.4 (2015): 2347-2376.*

[3] *Palattella, Maria Rita, et al. "Standardized protocol stack for the internet of (important) things." IEEE Communications Surveys & Tutorials 15.3 (2013): 1389-1406.*